DRAWING NOT TO BE USED FOR CONSTRUCTION

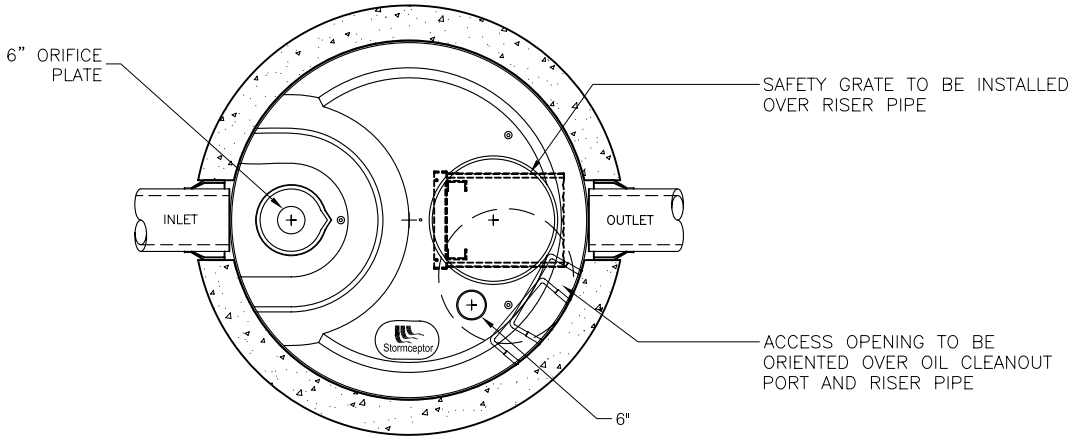

PLAN VIEW

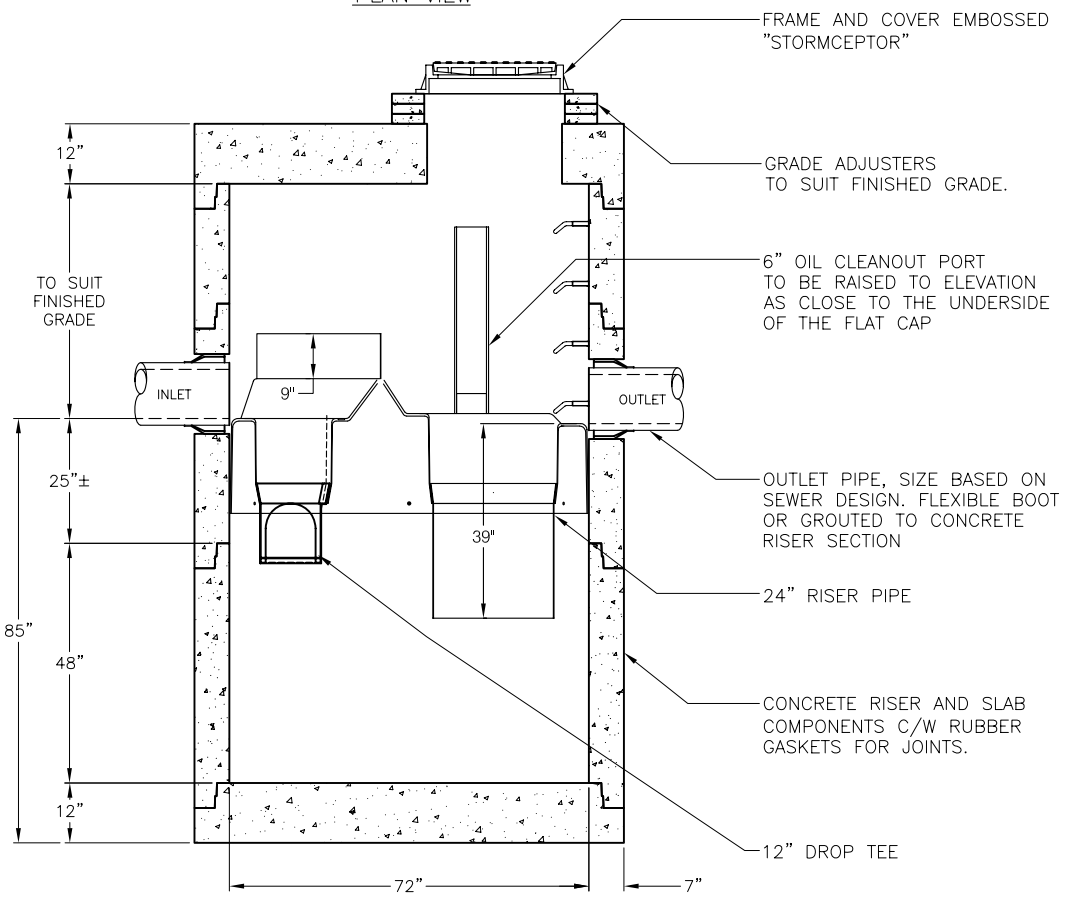

SECTION VIEW

THE STORMCEPTOR SYSTEM IS PROTECTED BY ONE OR MORE OF THE FOLLOWING PATENTS
Australia Patent No. 693,164 • 707,133 • 729,096 • 779401 | Austrian Patent No. 289,647 |
Canadian Patent No. 2,009,280 • 2,137,942 • 2,175,277 • 2,180,305 • 2,180,383 • 2,206,338 • 2,327,768 (Pending) |
China Patent No. 1,168,439 | Denmark DK 711,879 | German DE 69,534,021 | Indonesian Patent No 16,688 | Japan Patent No. 9-11476 (Pending) |
Korea Patent No. 10-2000-0026101 (Pending) | Malaysia Patent No. P19701737 (Pending) | New Zealand Patent No. 314646 |
United States Patent No. 4,985,148 • 5,498,331 • 5,725,760; 5,753,115 • 5,849,181 • 6,068,765 • 6,371,690

STORMCEPTOR EOS MODEL EOS 12-590	SCALE 1:40							Stormceptor EOS	
								FILE: **EOS12-590.dwg**	
								DRAWN BY: **B.L.**	
								DATE: **4 FEB 08**	1 OF 1
	REV	Y	M	D	DRN	CHK	DESCRIPTION	REV.:	